NU6 Low-voltage Surge Arrester

NU6- Ⅰ Low-voltage Surge Arrester

1. General

1.1 Certificates: international certificates are under proceeding;
1.2 Electric ratings: 230/400V, AC50/60Hz, 3-phase;
1.3 Application: Protect electric system and on-loading electrical apparatus from thunder and instantaneous over-voltage;
1.4 Standard: IEC/EN 61643-1

2. Technical Data

2.1 Technical parameters

Model	Shock current limp		Max. continuous operational voltage Uc (V~)	Level of protection Up (kV)	Nominal discharge current In (8/20 μ s) (kA)
	Ipeak (10/350 μ s) (kA)	Load Q As			
NU6- Ⅰ	15	7.5	275	4.0	25
			320	4.0	
			385	4.0	
			440	4.0	
NU6- Ⅰ	25	12.5	275	4.0	25
			320	4.0	
			385	4.0	
			440	4.0	
NU6- Ⅰ	40	20	275	4.0	50
			320	4.0	
			385	4.0	
			440	4.0	

3. Overall and Mounting Dimensions (mm)

NU6- Ⅰ (15kA, 25kA)

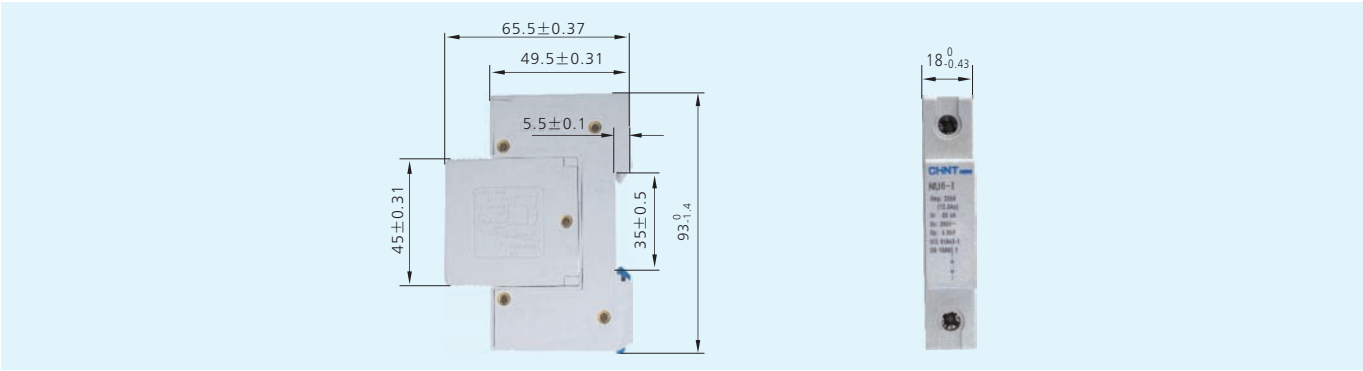

NU6- I (40kA)

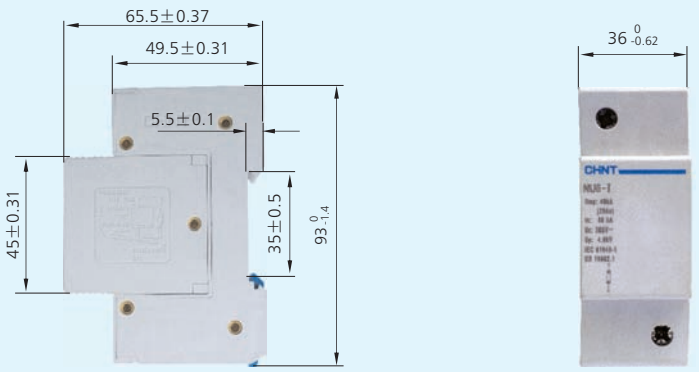

4. Ordering Information

Model	Shock current limp peak (10/350 μ s) (kA)	Max. continuous operational voltage Uc (V~)	CTN	Order Code	
				Standard	RoHS
NU6- I	15	275	180	152001	-
NU6- I	15	320	180	152002	-
NU6- I	15	385	180	152003	-
NU6- I	15	440	180	152004	-
NU6- I	25	275	180	152005	-
NU6- I	25	320	180	152006	-
NU6- I	25	385	180	152007	-
NU6- I	25	440	180	152008	-
NU6- I	40	275	180	152009	-
NU6- I	40	320	180	152010	-
NU6- I	40	385	180	152011	-
NU6- I	40	440	180	152012	-

NU6- II Low-voltage Surge Arrester

1. General

1.1 Certificates: international certificates are under proceeding;
1.2 Number of poles: 1, 2,3, 4;
1.3 Electric ratings: 230/400V, AC50/60Hz;
1.4 Application: Protect electric system and on-loading electrical apparatus from thunder and instantaneous over-voltage;
1.5 Standard: IEC/EN 61643-1

2. Technical Data

2.1 Technical parameters

Model	Max. continuous operational voltage Uc (V~)	Level of protection Up (kV)	Nominal discharge current In (8/20 μ s) (kA)	Maximum discharge current Imax (8/20 μ s) (kA)	Mounting category of protected apparatus
NU6- II	275	1.2	5	15	I , II , III
	320	1.5			I , II , III
	385	1.8			I , II , III
	460	2.0			II , III
	510	2.5			II , III
	550	3.0			II , III
NU6- II	275	1.2	15	40	I , II , III
	320	1.5			I , II , III
	385	1.8			II , III
	460	2.0			II , III
	510	2.5			II , III
	550	3.0			III
NU6- II	275	1.2	25	60	I , II , III
	320	1.5			II , III
	385	1.8			II , III
	460	2.0			II , III
	510	2.5			III
	550	3.0			III
NU6- II	275	1.2	40	100	II , III
	320	1.5			II , III
	385	1.8			II , III
	460	2.0			III
	510	2.5			III
	550	3.0			III

3. How to select surge protectors

a. The voltage should be ≤Uc;
b. Up<maximum impulse withstands;
c. Different protectors should be selected according to various grounding system and protection mode.

Model	Max. continuous operational voltage Uc (V~)	Applicable grounding system	Protection mode	Circuits	Number of poles
NU6-Ⅱ	275	TT	L-N	1 phase, 3 phase 4 wire	1
		TN-S	L-PE, N-PE, L-N	1 phase, 3 phase 5 wire	1,2,3,4
		TN-C	L-PE	1 phase, 3 phase 4 wire	1,2,3
	320	TT	L-N	1 phase, 3 phase 4 wire	1
		TN-S	L-PE, N-PE, L-N	1 phase, 3 phase 5 wire	1,2,3,4
		TN-C	L-PE	1 phase, 3 phase 4 wire	1,2,3
		TT	L-PE, N-PE, L-N	1 phase, 3 phase 4 wire	1,2,3,4
	385	TN-S	L-PE, N-PE, L-N	1 phase, 3 phase 5 wire	1,2,3,4
		TN-C	L-PE	1 phase, 3 phase 4 wire	1,2,3
		TT	L-PE, N-PE, L-N, L-L	1 phase, 3 phase 4 wire	1,2,3,4
	460	TN-S	L-PE, N-PE, L-N, L-L	1 phase, 3 phase 5 wire	1,2,3,4
		TN-C	L-PE, L-L	1 phase, 3 phase 4 wire	1,2,3
		IT	L-PE, N-PE, L-L	1 phase, 3 phase 3 /4 wire	1,2,3,4
		TT	L-PE, N-PE, L-N, L-L	1 phase, 3 phase 4 wire	1,2,3,4
	510	TN-S	L-PE, N-PE, L-N, L-L	1 phase, 3 phase 5 wire	1,2,3,4
		TN-C	L-PE, L-L	1 phase, 3 phase 4 wire	1,2,3
		IT	L-PE, N-PE, L-L	1 phase, 3 phase 3 /4 wire	1,2,3,4
		TT	L-PE, N-PE, L-N, L-L	1 phase, 3 phase 4 wire	1,2,3,4
	550	TN-S	L-PE, N-PE, L-N, L-L	1 phase, 3 phase 5 wire	1,2,3,4
		TN-C	L-PE, L-L	1 phase, 3 phase 4 wire	1,2,3
		IT	L-PE, N-PE, L-L	1 phase, 3 phase 3 /4 wire	1,2,3,4

4. Functions

4.1 The product is composed of two independent components: removable protective module 4 and base 2;
4.2 When the product is damaged, the part 3 will indicate; please replace the removable protective module 4 at once and there is no need to cutoff the circuits;
4.3 The part 1 is for maximum continuous operational voltage indication as well as avoiding replacement with wrong module.

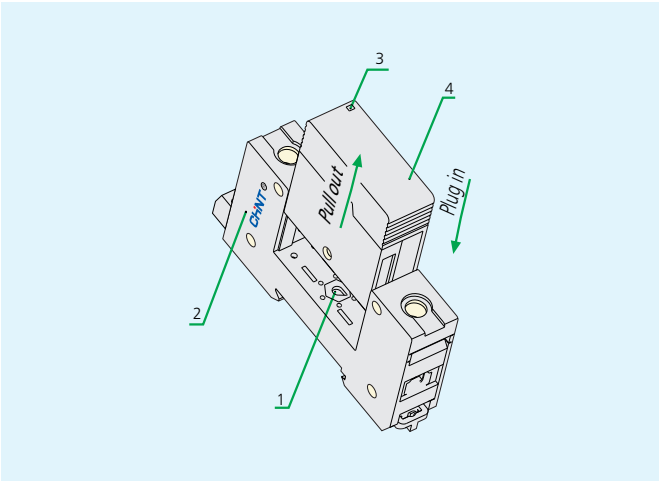

5. Overall and Mounting Dimensions (mm)

Overall and mounting dimension of NU6-II/F (5, 15, 25kA) with remote control port

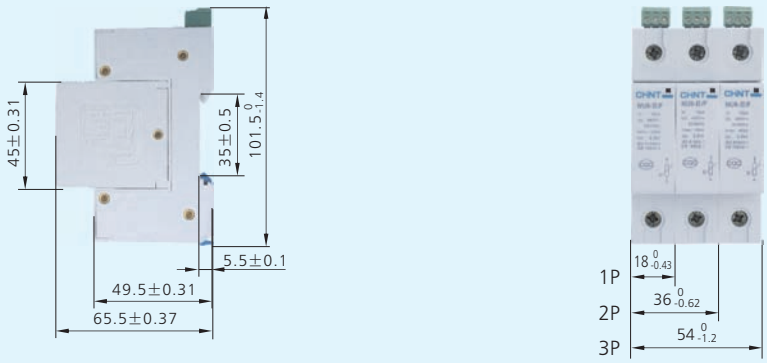

Overall and mounting dimension of NU6-II (5, 15, 25kA) without remote control port

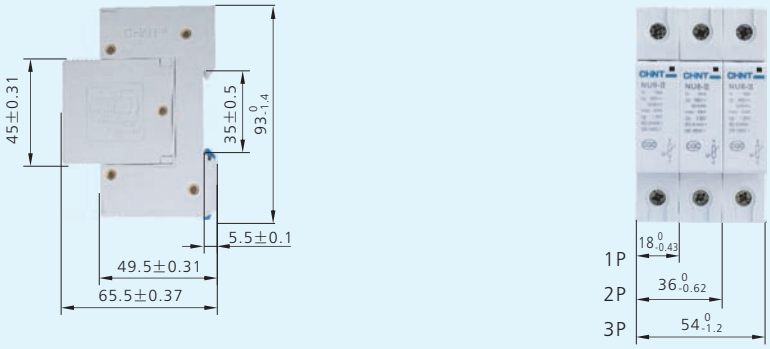

Overall and mounting dimension of NU6-II/F (40kA) with remote control port

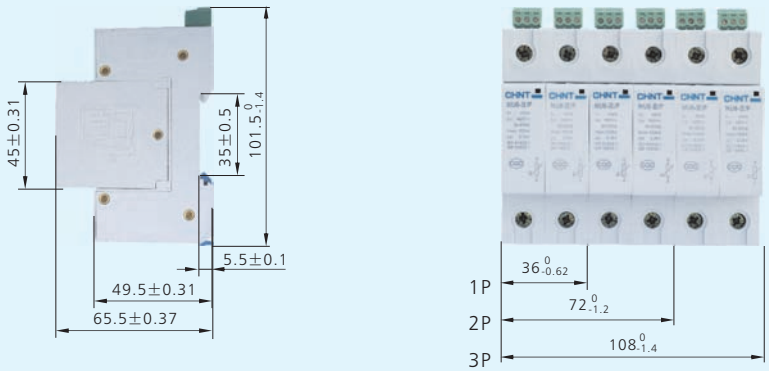

Overall and mounting dimension of NU6-II/F (40kA) without remote control port

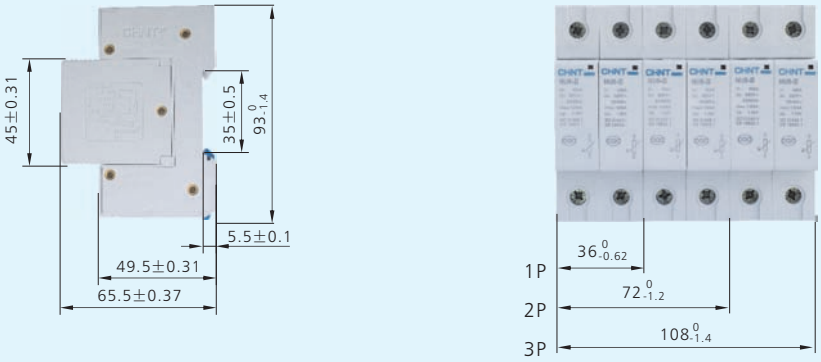

6. Ordering Information

★ NU6- Ⅱ 1P

Nominal discharge current (kA)	Max. continuous operational voltage Uc (V~)	With remote control port	CTN	Order Code	
				Standard	RoHS
5	275	No	180	152101	-
5	320	No	180	152102	-
5	385	No	180	152103	-
5	460	No	180	152104	-
5	510	No	180	152105	-
5	550	No	180	152106	-
15	275	No	180	152107	-
15	320	No	180	152108	-
15	385	No	180	152109	-
15	460	No	180	152110	-
15	510	No	180	152111	-
15	550	No	180	152112	-
25	275	No	180	152113	-
25	320	No	180	152114	-
25	385	No	180	152115	-
25	460	No	180	152116	-
25	510	No	180	152117	-
25	550	No	180	152118	-
40	275	No	90	152119	-
40	320	No	90	152120	-
40	385	No	90	152121	-
40	460	No	90	152122	-
40	510	No	90	152123	-
40	550	No	90	152124	-

Nominal discharge current (kA)	Max. continuous operational voltage Uc (V~)	With remote control port	CTN	Order Code	
				Standard	RoHS
5	275	Yes	180	152125	-
5	320	Yes	180	152126	-
5	385	Yes	180	152127	-
5	460	Yes	180	152128	-
5	510	Yes	180	152129	-
5	550	Yes	180	152130	-
15	275	Yes	180	152131	-
15	320	Yes	180	152132	-
15	385	Yes	180	152133	-
15	460	Yes	180	152134	-
15	510	Yes	180	152135	-
15	550	Yes	180	152136	-
25	275	Yes	180	152137	-
25	320	Yes	180	152138	-
25	385	Yes	180	152139	-
25	460	Yes	180	152140	-
25	510	Yes	180	152141	-
25	550	Yes	180	152142	-
40	275	Yes	90	152143	-
40	320	Yes	90	152144	-
40	385	Yes	90	152145	-
40	460	Yes	90	152146	-
40	510	Yes	90	152147	-
40	550	Yes	90	152148	-

★ NU6- Ⅱ 2P

Nominal discharge current (kA)	Max. continuous operational voltage Uc (V~)	With remote control port	CTN	Order Code	
				Standard	RoHS
5	275	No	90	152149	-
5	320	No	90	152150	-
5	385	No	90	152151	-
5	460	No	90	152152	-
5	510	No	90	152153	-
5	550	No	90	152154	-
15	275	No	90	152155	-
15	320	No	90	152156	-
15	385	No	90	152157	-
15	460	No	90	152158	-
15	510	No	90	152159	-
15	550	No	90	152160	-
25	275	No	90	152161	-
25	320	No	90	152162	-
25	385	No	90	152163	-
25	460	No	90	152164	-
25	510	No	90	152165	-
25	550	No	90	152166	-
40	275	No	45	152167	-
40	320	No	45	152168	-
40	385	No	45	152169	-
40	460	No	45	152170	-
40	510	No	45	152171	-
40	550	No	45	152172	-
5	275	Yes	90	152173	-
5	320	Yes	90	152174	-
5	385	Yes	90	152175	-
5	460	Yes	90	152176	-
5	510	Yes	90	152177	-
5	550	Yes	90	152178	-
15	275	Yes	90	152179	-
15	320	Yes	90	152180	-
15	385	Yes	90	152181	-
15	460	Yes	90	152182	-
15	510	Yes	90	152183	-
15	550	Yes	90	152184	-
25	275	Yes	90	152185	-
25	320	Yes	90	152186	-
25	385	Yes	90	152187	-
25	460	Yes	90	152188	-
25	510	Yes	90	152189	-
25	550	Yes	90	152190	-
40	275	Yes	45	152191	-
40	320	Yes	45	152192	-
40	385	Yes	45	152193	-
40	460	Yes	45	152194	-
40	510	Yes	45	152195	-
40	550	Yes	45	152196	-

★ NU6- Ⅱ 3P

Nominal discharge current (kA)	Max. continuous operational voltage Uc (V~)	With remote control port	CTN	Order Code	
				Standard	RoHS
5	275	No	60	152197	-
5	320	No	60	152198	-
5	385	No	60	152199	-
5	460	No	60	152200	-
5	510	No	60	152201	-
5	550	No	60	152202	-
15	275	No	60	152203	-
15	320	No	60	152204	-
15	385	No	60	152205	-
15	460	No	60	152206	-
15	510	No	60	152207	-
15	550	No	60	152208	-
25	275	No	60	152209	-
25	320	No	60	152210	-
25	385	No	60	152211	-
25	460	No	60	152212	-
25	510	No	60	152213	-
25	550	No	60	152214	-
40	275	No	30	152215	-
40	320	No	30	152216	-
40	385	No	30	152217	-
40	460	No	30	152218	-
40	510	No	30	152219	-
40	550	No	30	152220	-
5	275	Yes	60	152221	-
5	320	Yes	60	152222	-
5	385	Yes	60	152223	-
5	460	Yes	60	152224	-
5	510	Yes	60	152225	-
5	550	Yes	60	152226	-
15	275	Yes	60	152227	-
15	320	Yes	60	152228	-
15	385	Yes	60	152229	-
15	460	Yes	60	152230	-
15	510	Yes	60	152231	-
15	550	Yes	60	152232	-
25	275	Yes	60	152233	-
25	320	Yes	60	152234	-
25	385	Yes	60	152235	-
25	460	Yes	60	152236	-
25	510	Yes	60	152237	-
25	550	Yes	60	152238	-
40	275	Yes	30	152239	-
40	320	Yes	30	152240	-
40	385	Yes	30	152241	-
40	460	Yes	30	152242	-
40	510	Yes	30	152243	-
40	550	Yes	30	152244	-

★ NU6- Ⅱ 4P

Nominal discharge current (kA)	Max. continuous operational voltage Uc (V~)	With remote control port	CTN	Order Code	
				Standard	RoHS
5	275	No	45	152245	-
5	320	No	45	152246	-
5	385	No	45	152247	-
5	460	No	45	152248	-
5	510	No	45	152249	-
5	550	No	45	152250	-
15	275	No	45	152251	-
15	320	No	45	152252	-
15	385	No	45	152253	-
15	460	No	45	152254	-
15	510	No	45	152255	-
15	550	No	45	152256	-
25	275	No	45	152257	-
25	320	No	45	152258	-
25	385	No	45	152259	-
25	460	No	45	152260	-
25	510	No	45	152261	-
25	550	No	45	152262	-
40	275	No	15	152263	-
40	320	No	15	152264	-
40	385	No	15	152265	-
40	460	No	15	152266	-
40	510	No	15	152267	-
40	550	No	15	152268	-
5	275	Yes	45	152269	-
5	320	Yes	45	152270	-
5	385	Yes	45	152271	-
5	460	Yes	45	152272	-
5	510	Yes	45	152273	-
5	550	Yes	45	152274	-
15	275	Yes	45	152275	-
15	320	Yes	45	152276	-
15	385	Yes	45	152277	-
15	460	Yes	45	152278	-
15	510	Yes	45	152279	-
15	550	Yes	45	152280	-
25	275	Yes	45	152281	-
25	320	Yes	45	152282	-
25	385	Yes	45	152283	-
25	460	Yes	45	152284	-
25	510	Yes	45	152285	-
25	550	Yes	45	152286	-
40	275	Yes	15	152287	-
40	320	Yes	15	152288	-
40	385	Yes	15	152289	-
40	460	Yes	15	152290	-
40	510	Yes	15	152291	-
40	550	Yes	15	152292	-

Nu6-III Low-voltage Surge Arrester

1. General

1.1 Certificates: international certificates are under proceeding;
1.2 Electric ratings: Single phase power distribution and control system of AC50/60Hz, 230V;
1.3 Short circuit current: up to 10kA (8/20 μ s);
1.4 Application: Protect electric system and on-loading electrical apparatus from lightening and instantaneous over-voltage;
1.5 Standard: IEC/EN 61643-1

2. Technical Data

2.1 Technical parameters

Model	Uoc (1.2/50 μ s) (kV)	Max. continuous operational voltage Uc (V~)	Level of protection Up (kV)
NU6-III	2	275	1.5
		320	1.5
		385	1.5
	3	275	1.5
		320	1.5
		385	1.5
	4	275	1.5
		320	1.5
		385	1.5
	6	275	1.5
		320	1.5
		385	1.5
	10	275	1.5
		320	1.5
		385	1.5
	20	275	1.5
		320	1.5

3. Refer to table below for design type and protective mode of different surge protectors

<table>
<tr><th>Model</th><th>Uc (V~)</th><th colspan="5">Corresponding design type and protection mode</th></tr>
<tr><td rowspan="3">NU6-III</td><td>275</td><td rowspan="9">Compound type (with gas discharge tube + voltage sensitive resi stance) L-PE/N-PE</td><td rowspan="9">Voltage limit type (with voltage sensitive resistance) L-PE/N-PE</td><td rowspan="9"></td><td rowspan="9">Compound type (with gas discharge tube + voltage sensitive resistance) L/N-PE</td><td rowspan="9">Voltage limit type (with voltage sensitive resistance) L/N-PE</td></tr>
<tr><td>320</td></tr>
<tr><td>385</td></tr>
<tr><td rowspan="3">NU6-III</td><td>275</td></tr>
<tr><td>320</td></tr>
<tr><td>385</td></tr>
<tr><td rowspan="3">NU6-III</td><td>275</td></tr>
<tr><td>320</td></tr>
<tr><td>385</td></tr>
<tr><td rowspan="2">NU6-III</td><td>275</td></tr>
<tr><td>320</td></tr>
<tr><td></td><td rowspan="7"></td><td rowspan="7">Voltage limit type (with voltage sensitive resistance) L-PE/N-PE</td><td rowspan="7">Compound type (with gas discharge tube + voltage sensitive resistance) L-N/N-PE</td><td rowspan="7"></td><td rowspan="7">Voltage limit type (with voltage sensitive resistance) L/N-PE</td></tr>
<tr><td>385</td></tr>
<tr><td rowspan="3">NU6-III</td><td>275</td></tr>
<tr><td>320</td></tr>
<tr><td>385</td></tr>
<tr><td rowspan="2">NU6-III</td><td>275</td></tr>
<tr><td>320</td></tr>
</table>

4. Functions

4.1 The product is composed of two independent components: removable protective module 4 and base 2;

4.2 When the product is damaged, the part 3 will indicate; please replace the removable protective module 4 at once and there is no need to cutoff the circuits;

4.3 The part 1 is for maximum continuous operational voltage indication as well as avoiding replacement with wrong module.

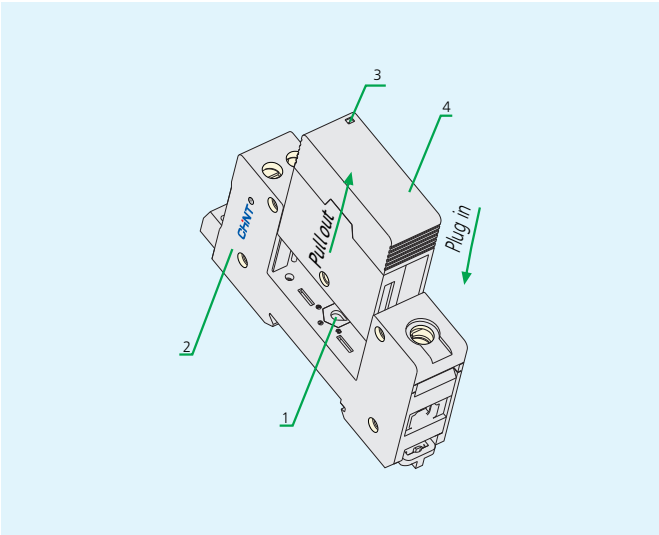

5. Overall and Mounting Dimensions (mm)

Overall and mounting dimension of NU6-III/F with remote control port

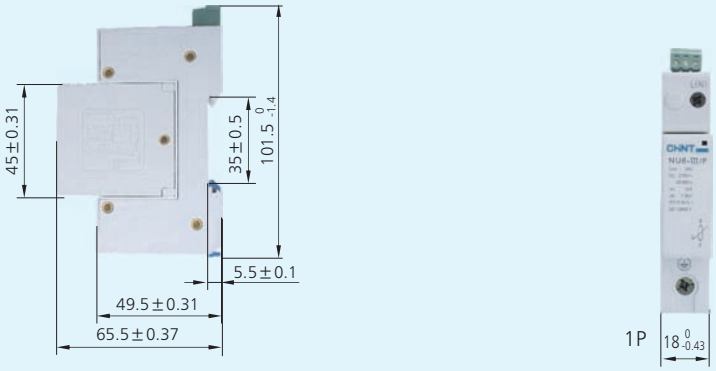

Overall and mounting dimension of NU6-III without remote control port

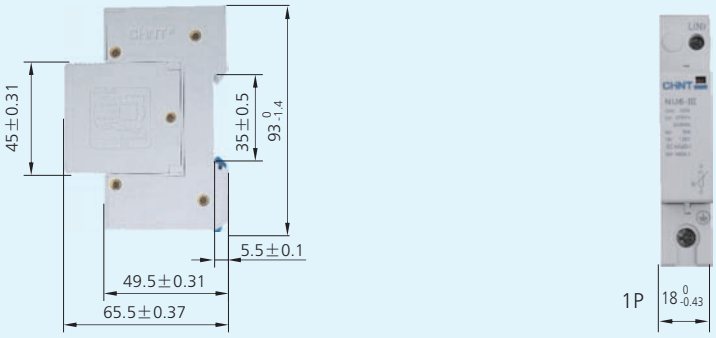

6. Ordering Information

★ Compound type (L/N-PE)

Uoc (kV)	Max. continuous operational voltage Uc (V~)	With remote control port	CTN	Order Code	
				Standard	RoHS
2	275	No	180	152301	-
2	320	No	180	152302	-
2	385	No	180	152303	-
3	275	No	180	152304	-
3	320	No	180	152305	-
3	385	No	180	152306	-
4	275	No	180	152307	-
4	320	No	180	152308	-
4	385	No	180	152309	-
6	275	No	180	152310	-
6	320	No	180	152311	-
6	385	No	180	152312	-
2	275	Yes	180	152313	-
2	320	Yes	180	152314	-
2	385	Yes	180	152315	-
3	275	Yes	180	152316	-
3	320	Yes	180	152317	-
3	385	Yes	180	152318	-
4	275	Yes	180	152319	-
4	320	Yes	180	152320	-
4	385	Yes	180	152321	-
6	275	Yes	180	152322	-
6	320	Yes	180	152323	-
6	385	Yes	180	152324	-

★ Compound type (L-N/N-PE)

Uoc (kV)	Max. continuous operational voltage Uc (V~)	With remote control port	CTN	Order Code	
				Standard	RoHS
6	385	No	180	152325	-
10	275	No	180	152326	-
10	320	No	180	152327	-
10	385	No	180	152328	-
20	275	No	180	152329	-
20	320	No	180	152330	-
6	385	Yes	180	152331	-
10	275	Yes	180	152332	-
10	320	Yes	180	152333	-
10	385	Yes	180	152334	-
20	275	Yes	180	152335	-
20	320	Yes	180	152336	-

★ Compound type (L-PE/N-PE)

Uoc (kV)	Max. continuous operational voltage Uc (V~)	With remote control port	CTN	Order Code	
				Standard	RoHS
2	275	No	180	152337	-
2	320	No	180	152338	-
2	385	No	180	152339	-
3	275	No	180	152340	-
3	320	No	180	152341	-
3	385	No	180	152342	-
4	275	No	180	152343	-
4	320	No	180	152344	-
4	385	No	180	152345	-
6	275	No	180	152346	-
6	320	No	180	152347	-
6	385	No	180	152348	-
2	275	Yes	180	152349	-
2	320	Yes	180	152350	-
2	385	Yes	180	152351	-
3	275	Yes	180	152352	-
3	320	Yes	180	152353	-
3	385	Yes	180	152354	-
4	275	Yes	180	152355	-
4	320	Yes	180	152356	-
4	385	Yes	180	152357	-
6	275	Yes	180	152358	-
6	320	Yes	180	152359	-
6	385	Yes	180	152360	-

★ Voltage limit type (L/N-PE)

Uoc (kV)	Max. continuous operational voltage Uc (V~)	With remote control port	CTN	Order Code	
				Standard	RoHS
2	275	No	180	152361	-
2	320	No	180	152362	-
2	385	No	180	152363	-
3	275	No	180	152364	-
3	320	No	180	152365	-
3	385	No	180	152366	-
4	275	No	180	152367	-
4	320	No	180	152368	-
4	385	No	180	152369	-
6	275	No	180	152370	-
6	320	No	180	152371	-
6	385	No	180	152372	-
10	275	No	180	152373	-
10	320	No	180	152374	-
10	385	No	180	152375	-
20	275	No	180	152376	-
20	320	No	180	152377	-
2	275	Yes	180	152378	-
2	320	Yes	180	152379	-
2	385	Yes	180	152380	-
3	275	Yes	180	152381	-
3	320	Yes	180	152382	-
3	385	Yes	180	152383	-
4	275	Yes	180	152384	-
4	320	Yes	180	152385	-
4	385	Yes	180	152386	-
6	275	Yes	180	152387	-
6	320	Yes	180	152388	-
6	385	Yes	180	152389	-
10	275	Yes	180	152390	-
10	320	Yes	180	152391	-
10	385	Yes	180	152392	-
20	275	Yes	180	152393	-
20	320	Yes	180	152394	-

★ Voltage limit type (L-PE/N-PE)

Uoc (kV)	Max. continuous operational voltage Uc V~	With remote control port	CTN	Order Code	
				Standard	RoHS
2	275	No	180	152395	-
2	320	No	180	152396	-
2	385	No	180	152397	-
3	275	No	180	152398	-
3	320	No	180	152399	-
3	385	No	180	152400	-
4	275	No	180	152401	-
4	320	No	180	152402	-
4	385	No	180	152403	-
6	275	No	180	152404	-
6	320	No	180	152405	-
6	385	No	180	152406	-
10	275	No	180	152407	-
10	320	No	180	152408	-
10	385	No	180	152409	-
20	275	No	180	152410	-
20	320	No	180	152411	-
2	275	Yes	180	152412	-
2	320	Yes	180	152413	-
2	385	Yes	180	152414	-
3	275	Yes	180	152415	-
3	320	Yes	180	152416	-
3	385	Yes	180	152417	-
4	275	Yes	180	152418	-
4	320	Yes	180	152419	-
4	385	Yes	180	152420	-
6	275	Yes	180	152421	-
6	320	Yes	180	152422	-
6	385	Yes	180	152423	-
10	275	Yes	180	152424	-
10	320	Yes	180	152425	-
10	385	Yes	180	152426	-
20	275	Yes	180	152427	-
20	320	Yes	180	152428	-

Allocation of surge arrestors under TT system

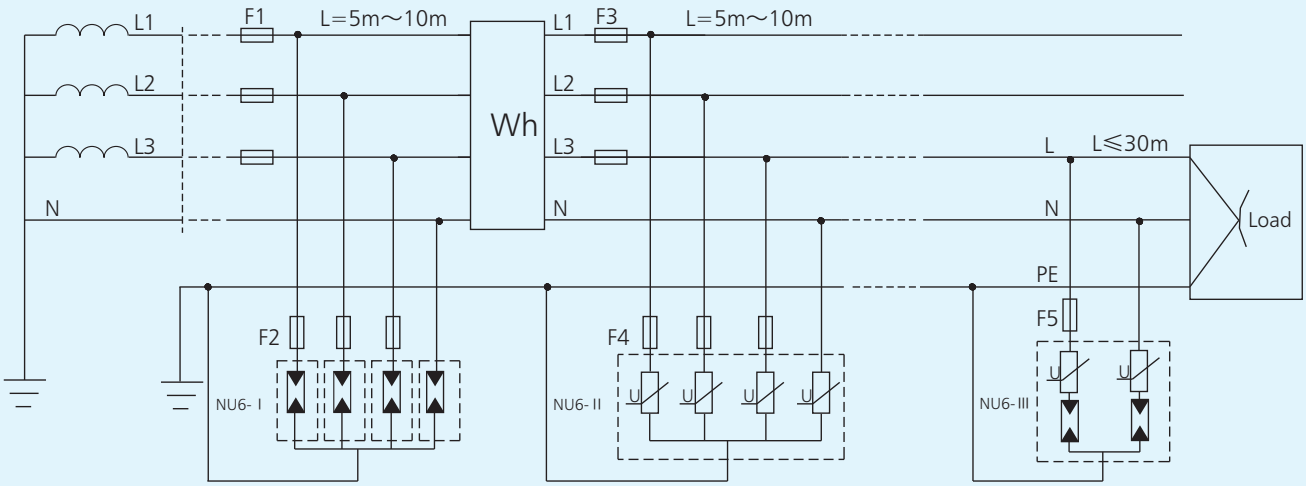

NU6- Ⅰ series surge arrestor
The boundary between lightning protection areas of LPZ0 & LPZ1
Protection category: B
Over-voltage mounting category: Ⅲ
Rated impulse withstand voltage: 4000V
Parameters of discharge: limp and In
Applicable to master power distribution switchgear

NU6- Ⅱ series surge arrestor
The boundary between lightning protection areas of LPZ1 & LPZ2
Protection category: C
Over-voltage mounting category: Ⅱ
Rated impulse withstand voltage: 2500V
Parameters of discharge: Imax and In
Applicable to branch power distribution switchgear

NU6-Ⅲ series surge arrestor
The boundary between lightning protection areas of LPZ2 & LPZ3
Protection category: D
Over-voltage mounting category: Ⅰ
Rated impulse withstand voltage: 1500V
Parameters of discharge: Uoc and Isc
Applicable to terminal of power distribution

*Note: Fuse/Circuit breaker are strongly recommended to be installed upstream the surge protector.(F1, F2, F3, F4, F5)

Recommended circuit breaker selection

Surge protector	Nominal discharge Current (kA)	Circuit breaker (upstream)
NU6- Ⅰ	ALL	NM8-125S 100A
NU6- Ⅱ	5	NB1 D20
	15	NB1 D63
	25	DZ158 80A
	40	DZ158 100A
NU6-Ⅲ	ALL	NB1 D20